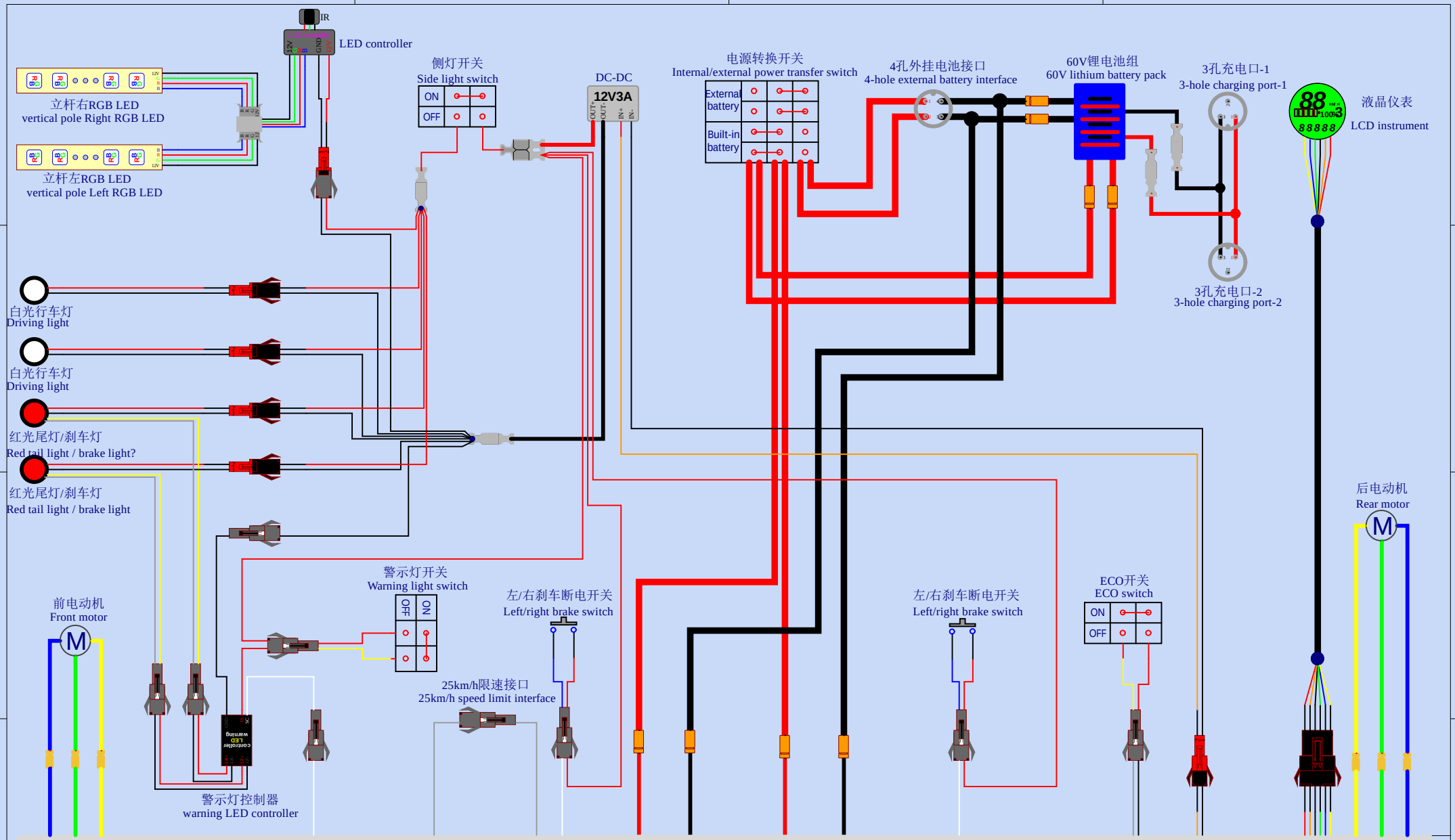

DT-SPIDER型二合一直流无刷电机控制器

DT-SPIDER type two-in-one brushless motor controller

Date:	2022/3/25	Sheet	of
File:	E:\Q\..\DT-SPIDER.SchDoc	Drawn By:	